Pneumatic Automatic tool change ATC BT30 precision belt synchronous wheel high-speed bearing servo spindle kit installation options 8000/12000 rpm 4/5 bearings

Option 1: BT30 RPM8000 4 bearing Spindle
Option 2: BT30 RPM8000 5 bearing Spindle
Option 3: BT30 RPM12000 5 bearing Spindle

The sleeve has a diameter of 90 mm. The shaft core is made of standard 20CrMnTi alloy steel, manufactured using standard processes such as forging and carburizing.
It features high rigidity and high rotational speed. It is widely used in various machine tools.



BT30 Spindle
8000 RPM
5 Bearing



BT30 Spindle
12000 RPM
5 Bearing




IWCNC

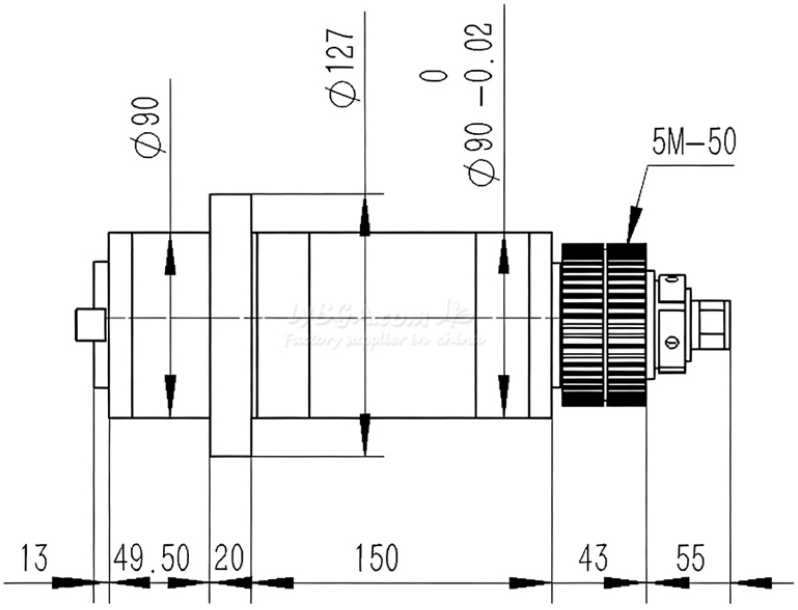
Φ90
Φ127
Φ90 0 -0.02
5M–50
13
49.50
20
150
43
55

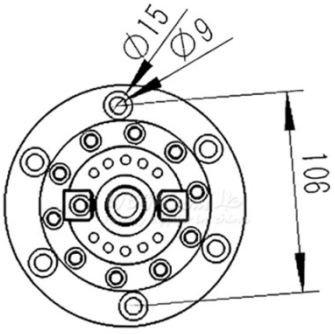
Ø15
Ø9
106









